Inline All Models & Sizes

Specification Sheet

Table of Contents

Inline All Models & Sizes

About the Inline.....3

Slim form computers.....4

Standard Sizes

43” 5

49” 6

55” 7

55” +PLUS.....8

65” 9

75” 10

Large Format and Alternative Sizes

28” Stacked/Square.....11

34” 5K Ultrawide.....12

Dual 49”.....13

86”.....14

Additional Information

Customizations.....15

What’s Inside.....16

Software.....17

About Ideum 18

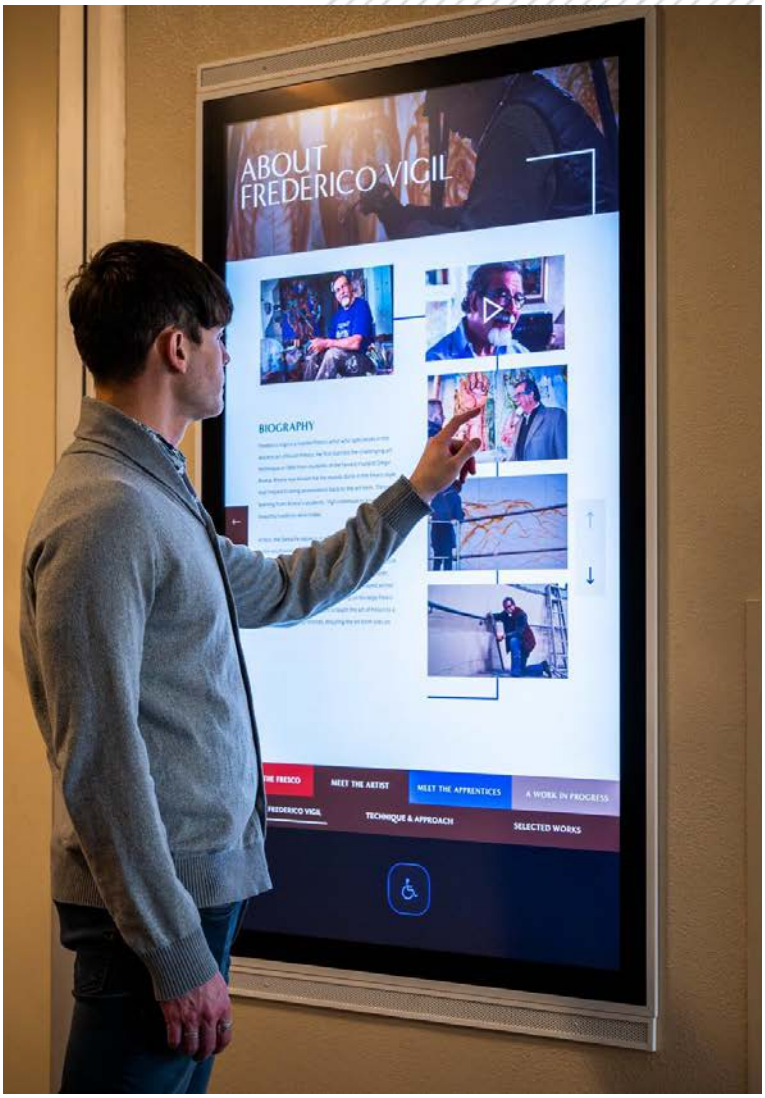

All Ideum displays can be mounted either vertically or horizontally.

Inline All Models & Sizes

Specification Sheet

The Inline is an open-frame, large-format, multitouch display designed to fit flush into a wide variety of custom surfaces and enclosures. The Inline's aluminum frame with multiple connection points allows for seamless integration into custom touch tables, interactive exhibits, conference tables, interactive bars, and other applications. Contact us for a complete integration guide.

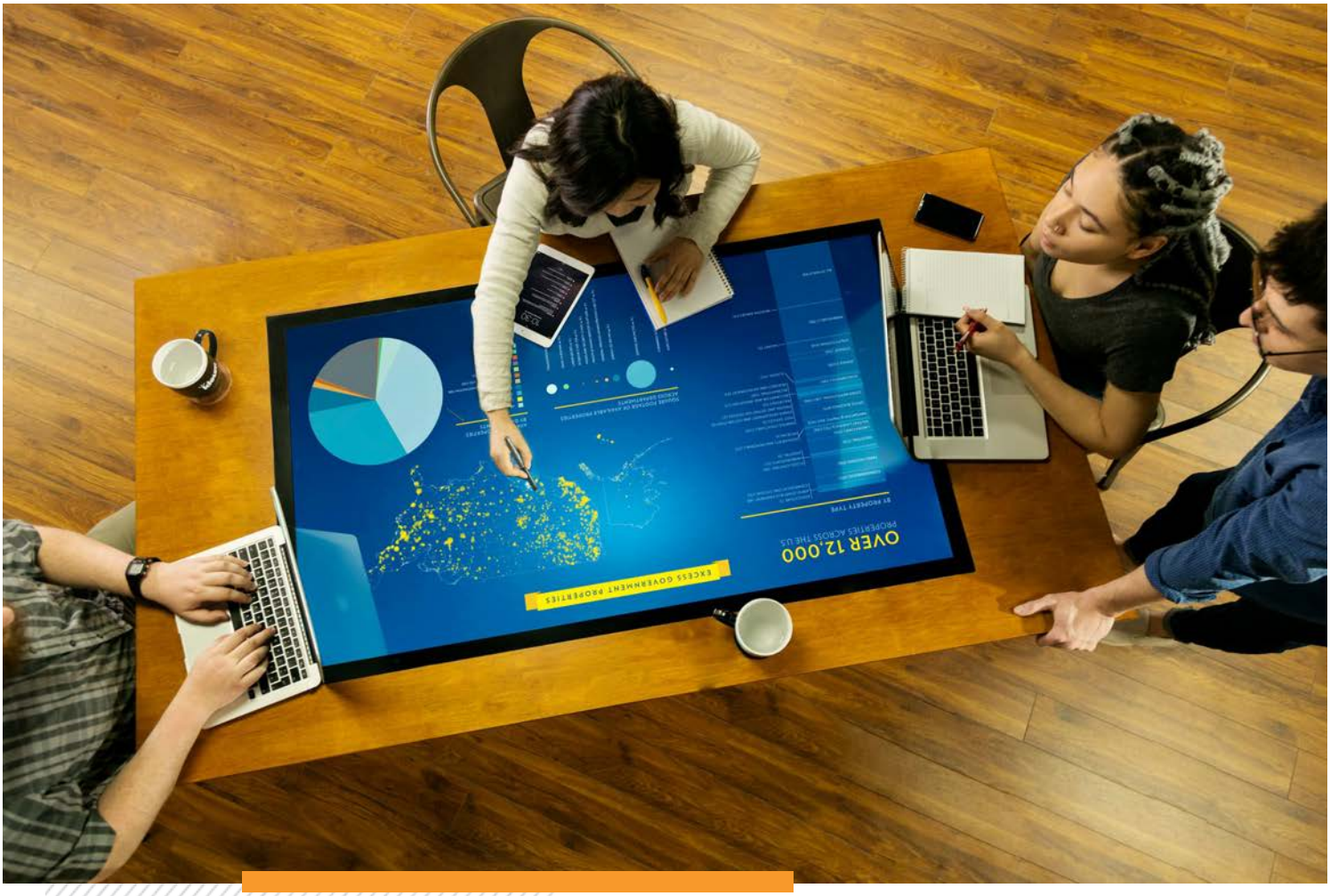

The Inline incorporates industry-leading touch technology from Displax and TES with support for 40 or 80 simultaneous touch points respectively. Unless otherwise specified, all models use LG commercial 4K UHD monitors rated 24/7. All Inline models have an all-aluminum frame and are designed and built in the USA from globally sourced components.

Inline displays can be equipped with an optional integrated computer which includes an Intel™ Core processor, the latest NVIDIA™ discrete graphics card, and single push-button power. The Inline computer systems come standard with Windows 11 Professional and can run any supported PC applications. With the integrated computer option, it ships as a complete system with lockable, push-button operation.

The Inline is designed for integration into custom touch tables, exhibits, cabinetry, and walls. Please refer to the integration guide (available separately) for details. All of Ideum's hardware is backed by a three-year warranty.

Need a standard display?

All of the Inline models listed in this specification sheet are also available as stand-alone **Presenter displays.** These hardened displays can be used in a variety of settings and are designed to be hung horizontally or vertically.

Inline 43”

Specification Sheet

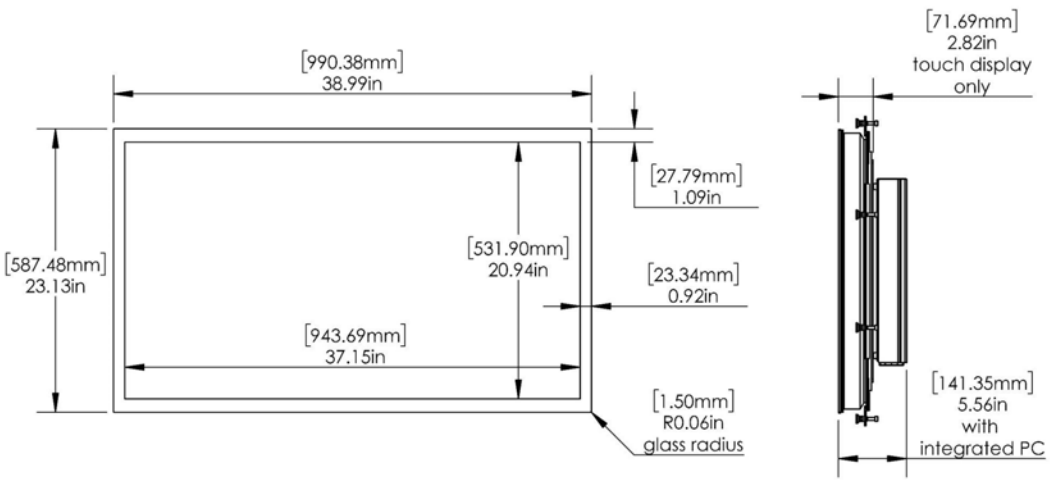

WEIGHT
64LBS
29 KG

SHIP WEIGHT
169 LBS
77 KG

Interactive Display

- 4K UHD (3840x2160) LG commercial display rated 24/7
- 43” diagonal, strengthened, anti-stiction, 4mm glass surface
- TES /3M™ projected capacitive touch sensor
- ±5ms touch response time
- 80 touch points with palm rejection
- Native contrast ratio 1100:1
- 500 nits luminance
- Full support for Tangible Engine object recognition software

Optional Integrated System

- Single push-button power
- Custom lockable enclosure
- Windows 11 Professional
- Universal 110-240V power system
- Two 10W integrated speakers

STANDARD

- Intel 15th Gen Core Ultra 5 245K processor
- NVIDIA RTX A2000 16GB Ada Generation graphics card
- 16GB DDR5 RAM
- 500GB M.2 NVMe SSD

PERFORMANCE

- Intel 15th Gen Core Ultra 7 265K processor
- NVIDIA RTX 4000 20GB Ada Generation graphics card
- 32GB DDR5 RAM
- Dual 500GB M.2 NVMe SSD

Connectivity

- TPM/TPP compatible for secure environments
- WiFi 802.11 a/b/g/n/ac, Ethernet, Bluetooth 5.0
- Wireless keyboard with integrated trackpad
- Direct access via USB ports
- Audio output via 1/8” audio jack
- HDMI output (PC)
- RFID (optional)
- Communication hardware can be removed upon request for secure environments

Inline 49”

Specification Sheet

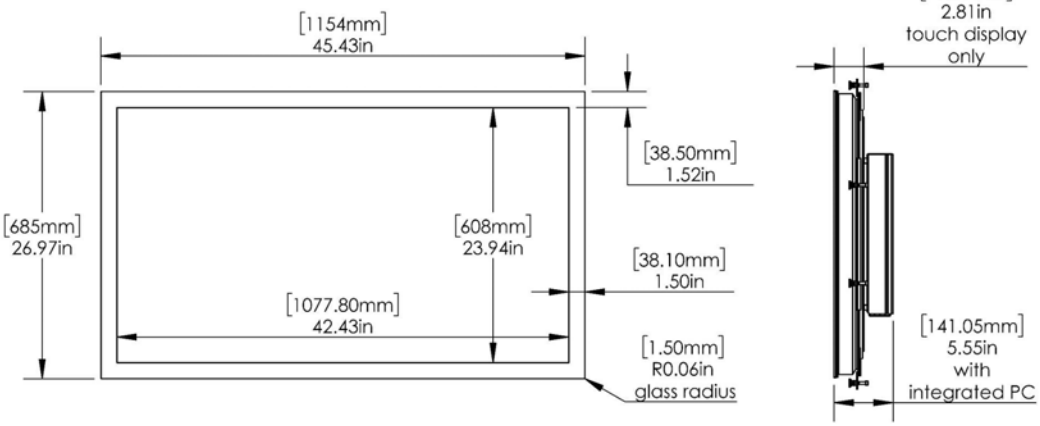

WEIGHT
88 LBS
40 KG

SHIP WEIGHT
200 LBS
91 KG

Interactive Display

- 4K UHD (3840x2160) LG commercial display rated 24/7
- 49” diagonal, strengthened, anti-stiction, 4mm glass surface
- TES /3M™ projected capacitive touch sensor
- ±5ms touch response time
- 80 touch points with palm rejection
- Native contrast ratio 1100:1
- 500 nits luminance
- Full support for Tangible Engine object recognition software

Optional Integrated System

- Single push-button power
- Custom lockable enclosure
- Windows 11 Professional
- Universal 110-240V power system
- Two 10W integrated speakers

STANDARD

- Intel 15th Gen Core Ultra 5 245K processor
- NVIDIA RTX A2000 16GB Ada Generation graphics card
- 16GB DDR5 RAM
- 500GB M.2 NVMe SSD

PERFORMANCE

- Intel 15th Gen Core Ultra 7 265K processor
- NVIDIA RTX 4000 20GB Ada Generation graphics card
- 32GB DDR5 RAM
- Dual 500GB M.2 NVMe SSD

Connectivity

- TPM/TPP compatible for secure environments
- WiFi 802.11 a/b/g/n/ac, Ethernet, Bluetooth 5.0
- Wireless keyboard with integrated trackpad
- Direct access via USB ports
- Audio output via 1/8” audio jack
- HDMI output (PC)
- RFID (optional)
- Communication hardware can be removed upon request for secure environments

Inline 55”

Specification Sheet

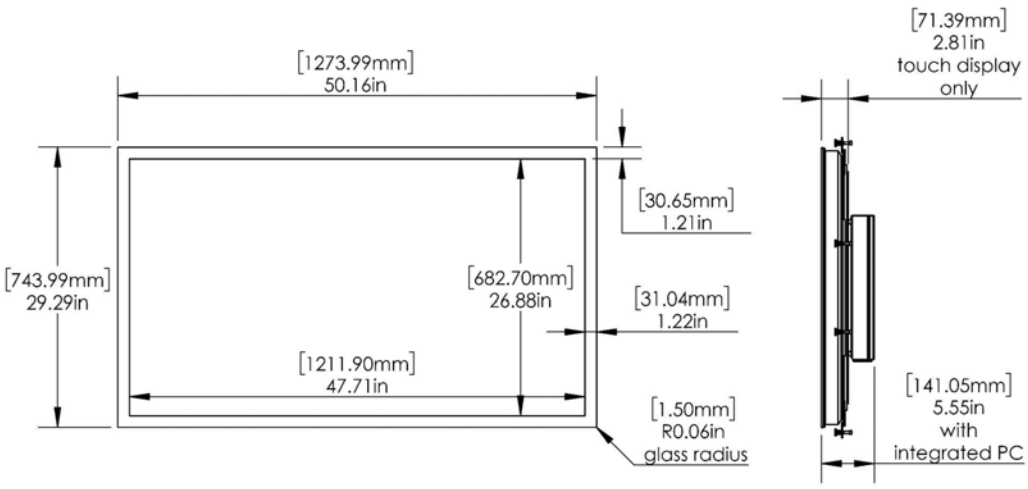

WEIGHT
97 LBS
44 KG

SHIP WEIGHT
220 LBS
100 KG

Interactive Display

- 4K UHD (3840x2160) LG commercial display rated 24/7
- 55” diagonal, strengthened, anti-stiction, 4mm glass surface
- Displax projected capacitive touch sensor
- ±5ms touch response time
- 40 touch points with palm rejection
- Native contrast ratio 1100:1
- 500 nits luminance
- Limited support for Tangible Engine object recognition software

Optional Integrated System

- Single push-button power
- Custom lockable enclosure
- Windows 11 Professional
- Universal 110-240V power system
- Two 10W integrated speakers

STANDARD

- Intel 15th Gen Core Ultra 5 245K processor
- NVIDIA RTX A2000 16GB Ada Generation graphics card
- 16GB DDR5 RAM
- 500GB M.2 NVMe SSD

PERFORMANCE

- Intel 15th Gen Core Ultra 7 265K processor
- NVIDIA RTX 4000 20GB Ada Generation graphics card
- 32GB DDR5 RAM
- Dual 500GB M.2 NVMe SSD

Connectivity

- TPM/TPP compatible for secure environments
- WiFi 802.11 a/b/g/n/ac, Ethernet, Bluetooth 5.0
- Wireless keyboard with integrated trackpad
- Direct access via USB ports
- Audio output via 1/8” audio jack
- HDMI output (PC)
- RFID (optional)
- Communication hardware can be removed upon request for secure environments

Inline 55” +PLUS

Specification Sheet

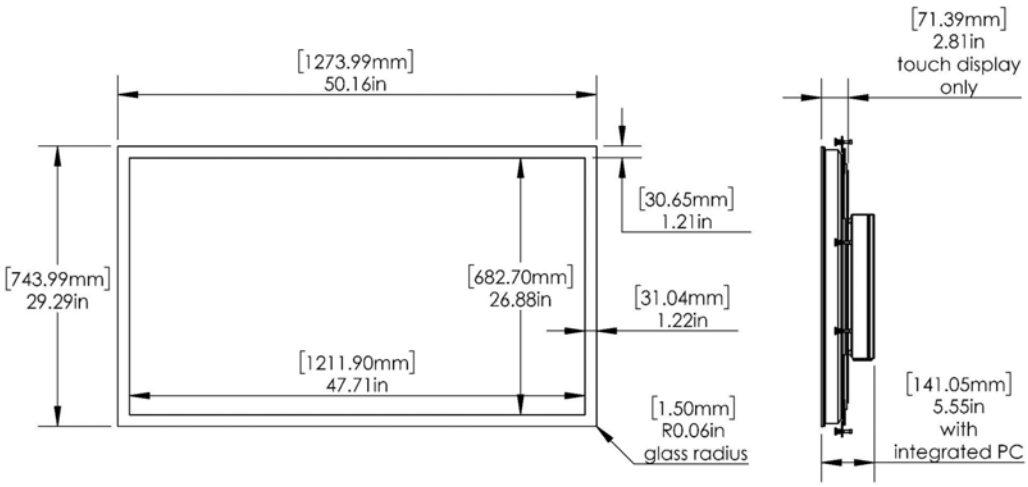

WEIGHT
92 LBS
42 KG

SHIP WEIGHT
215 LBS
98 KG

Interactive Display

- 4K UHD (3840x2160) LG commercial display rated 24/7
- 55” diagonal, strengthened, anti-stiction, 4mm glass surface
- Optically bonded sensor and LCD
- TES /3M™ projected capacitive touch sensor
- ±5ms touch response time
- 80 touch points with palm rejection
- Native contrast ratio 1100:1
- 500 nits luminance
- Full support for Tangible Engine object recognition software

Optional Integrated System

- Single push-button power
- Custom lockable enclosure
- Windows 11 Professional
- Universal 110-240V power system
- Two 10W integrated speakers

STANDARD

- Intel 15th Gen Core Ultra 5 245K processor
- NVIDIA RTX A2000 16GB Ada Generation graphics card
- 16GB DDR5 RAM
- 500GB M.2 NVMe SSD

PERFORMANCE

- Intel 15th Gen Core Ultra 7 265K processor
- NVIDIA RTX 4000 20GB Ada Generation graphics card
- 32GB DDR5 RAM
- Dual 500GB M.2 NVMe SSD

Connectivity

- TPM/TPP compatible for secure environments
- WiFi 802.11 a/b/g/n/ac, Ethernet, Bluetooth 5.0
- Wireless keyboard with integrated trackpad
- Direct access via USB ports
- Audio output via 1/8” audio jack
- HDMI output (PC)
- RFID (optional)
- Communication hardware can be removed upon request for secure environments

Inline 65”

Specification Sheet

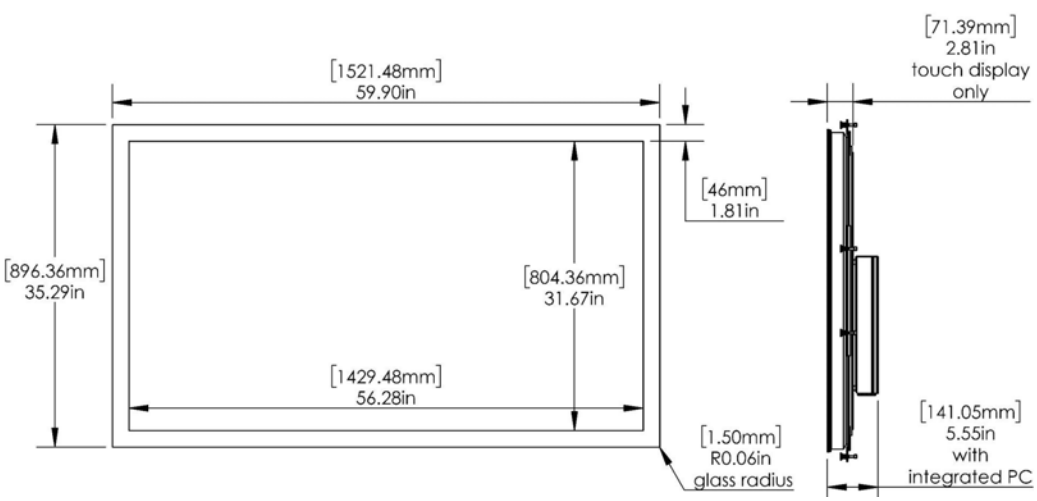

WEIGHT
147 LBS
67 KG

SHIP WEIGHT
302 LBS
137 KG

Interactive Display

- 4K UHD (3840x2160) LG commercial display rated 24/7
- 65” diagonal, strengthened, anti-stiction, 4mm glass surface
- Displax projected capacitive touch sensor
- ±5ms touch response time
- 40 touch points with palm rejection
- Native contrast ratio 1100:1
- 500 nits luminance
- Full support for Tangible Engine object recognition software

Optional Integrated System

- Single push-button power
- Custom lockable enclosure
- Windows 11 Professional
- Universal 110-240V power system
- Two 10W integrated speakers

STANDARD

- Intel 15th Gen Core Ultra 5 245K processor
- NVIDIA RTX A2000 16GB Ada Generation graphics card
- 16GB DDR5 RAM
- 500GB M.2 NVMe SSD

PERFORMANCE

- Intel 15th Gen Core Ultra 7 265K processor
- NVIDIA RTX 4000 20GB Ada Generation graphics card
- 32GB DDR5 RAM
- Dual 500GB M.2 NVMe SSD

Connectivity

- TPM/TPP compatible for secure environments
- WiFi 802.11 a/b/g/n/ac, Ethernet, Bluetooth 5.0
- Wireless keyboard with integrated trackpad
- Direct access via USB ports
- Audio output via 1/8” audio jack
- HDMI output (PC)
- RFID (optional)
- Communication hardware can be removed upon request for secure environments

Inline 75”

Specification Sheet

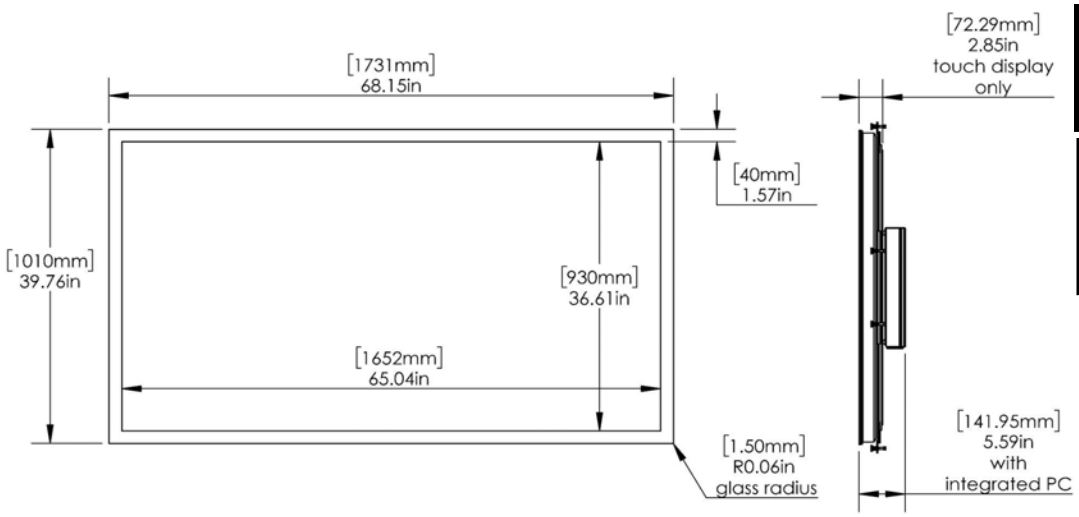

WEIGHT
204 LBS
93 KG

SHIP WEIGHT
368 LBS
167 KG

Interactive Display

- 4K UHD (3840x2160) LG commercial display
- 75” diagonal, strengthened, anti-stiction, 4mm glass surface
- Displax projected capacitive touch sensor
- ±5ms touch response time
- 40 touch points with palm rejection
- Native contrast ratio 1400:1
- 430 nits luminance
- Full support for Tangible Engine object recognition software

Optional Integrated System

- Single push-button power
- Custom lockable enclosure
- Windows 11 Professional
- Universal 110-240V power system
- Two 10W integrated speakers

STANDARD

- Intel 15th Gen Core Ultra 5 245K processor
- NVIDIA RTX A2000 16GB Ada Generation graphics card
- 16GB DDR5 RAM
- 500GB M.2 NVMe SSD

PERFORMANCE

- Intel 15th Gen Core Ultra 7 265K processor
- NVIDIA RTX 4000 20GB Ada Generation graphics card
- 32GB DDR5 RAM
- Dual 500GB M.2 NVMe SSD

Connectivity

- TPM/TPP compatible for secure environments
- WiFi 802.11 a/b/g/n/ac, Ethernet, Bluetooth 5.0
- Wireless keyboard with integrated trackpad
- Direct access via USB ports
- Audio output via 1/8” audio jack
- HDMI output (PC)
- RFID (optional)
- Communication hardware can be removed upon request for secure environments

Inline 28” Stacked/Square

Specification Sheet

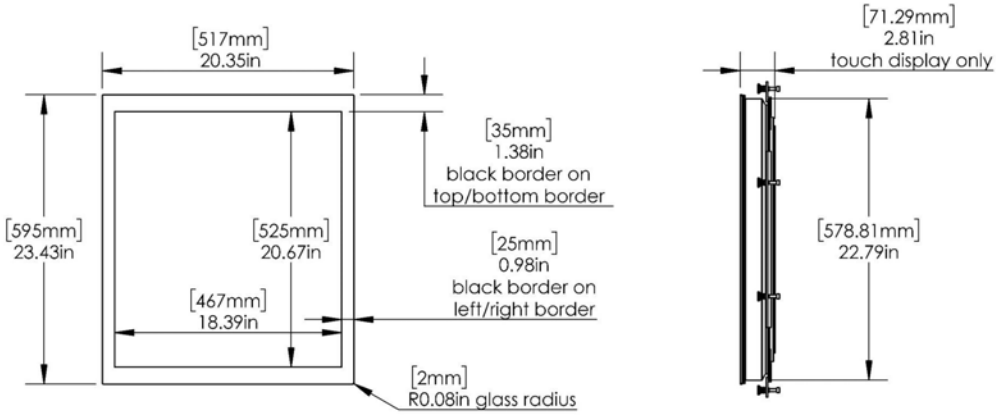

WEIGHT
29 LBS
13 KG

SHIP WEIGHT
110 LBS
50 KG

Interactive Display

- SDQHD (2460 x 2880) LG display, 16:18 ratio.
- 28” diagonal, strengthened, anti-stiction, 4mm glass surface
- Displax projected capacitive touch sensor
- ±5ms touch response time
- 40 touch points with palm rejection
- Native contrast ratio 1000:1
- 300 nit (cd/m2) luminance

Optional External Computer System

- Single push-button power
- Custom lockable enclosure
- Windows 11 Professional
- Universal 110-240V power system
- Two 10W integrated speakers

STANDARD

- Intel 15th Gen Core Ultra 5 245K processor
- NVIDIA RTX A2000 16GB Ada Generation graphics card
- 16GB DDR5 RAM
- 500GB M.2 NVMe SSD

PERFORMANCE

- Intel 15th Gen Core Ultra 7 265K processor
- NVIDIA RTX 4000 20GB Ada Generation graphics card
- 32GB DDR5 RAM
- Dual 500GB M.2 NVMe SSD

Connectivity

- TPM/TPP compatible for secure environments
- WiFi 802.11 a/b/g/n/ac, Ethernet, Bluetooth 5.0
- Wireless keyboard with integrated trackpad
- Direct access via USB ports
- Audio output via 1/8” audio jack
- HDMI output (PC)
- RFID (optional)
- Communication hardware can be removed upon request for secure environments

Inline 34” Ultrawide 5K

Specification Sheet

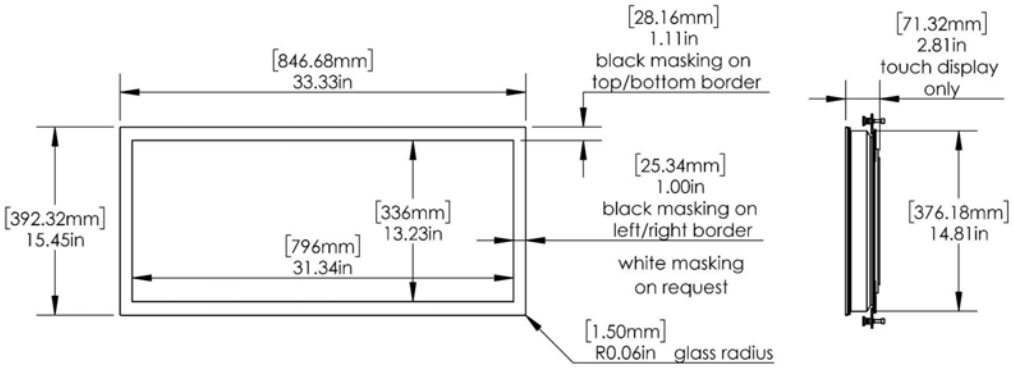

WEIGHT
31 LBS
14 KG

SHIP WEIGHT
116 LBS
53 KG

Interactive Display

- 5K UHD (5120x2160) LG commercial display rated 24/7
- 34” diagonal, strengthened, anti-stiction, 4mm glass surface
- Displax projected capacitive touch sensor
- ±5ms touch response time
- 40 touch points with palm rejection
- Native contrast ratio 1200:1
- 400 nits luminance

Optional External Computer System

- Single push-button power
- Custom lockable enclosure
- Windows 11 Professional
- Universal 110-240V power system
- Two 10W integrated speakers

STANDARD

- Intel 15th Gen Core Ultra 5 245K processor
- NVIDIA RTX A2000 16GB Ada Generation graphics card
- 16GB DDR5 RAM
- 500GB M.2 NVMe SSD

PERFORMANCE

- Intel 15th Gen Core Ultra 7 265K processor
- NVIDIA RTX 4000 20GB Ada Generation graphics card
- 32GB DDR5 RAM
- Dual 500GB M.2 NVMe SSD

Connectivity

- TPM/TPP compatible for secure environments
- WiFi 802.11 a/b/g/n/ac, Ethernet, Bluetooth 5.0
- Wireless keyboard with integrated trackpad
- Direct access via USB ports
- Audio output via 1/8” audio jack
- HDMI output (PC)
- RFID (optional)
- Communication hardware can be removed upon request for secure environments

Inline Dual 49”

Specification Sheet

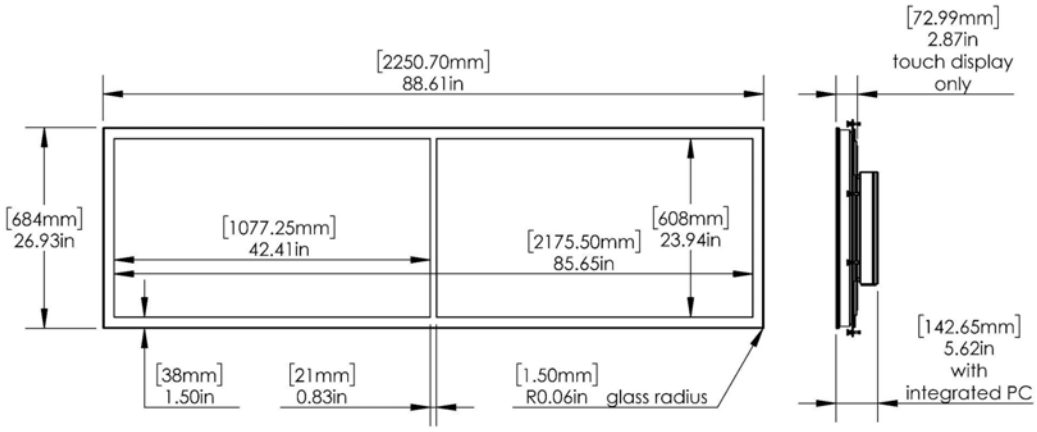

WEIGHT
198 LBS
90 KG

SHIP WEIGHT
406 LBS
184 KG

Interactive Display

- (2) 49” 4K UHD (3840x2160) LG commercial display rated 24/7
- 89” diagonal, strengthened, anti-stiction, 6mm glass surface
- Zytronic projected capacitive touch sensor
- ±5ms touch response time
- 40 touch points with palm rejection
- Native contrast ratio 1100:1
- 500 nits luminance
- Full support for Tangible Engine object recognition software

Optional Integrated System

- Single push-button power
- Custom lockable enclosure
- Windows 11 Professional
- Universal 110-240V power system
- Two 10W integrated speakers

PERFORMANCE

- Intel 15th Gen Core Ultra 7 265K processor
- NVIDIA RTX 4000 20GB Ada Generation graphics card
- 32GB DDR5 RAM
- Dual 500GB M.2 NVMe SSD

Connectivity

- TPM/TPP compatible for secure environments
- WiFi 802.11 a/b/g/n/ac, Ethernet, Bluetooth 5.0
- Wireless keyboard with integrated trackpad
- Direct access via USB ports
- Audio output via 1/8” audio jack
- HDMI output (PC)
- RFID (optional)
- Communication hardware can be removed upon request for secure environments

Inline 86”

Specification Sheet

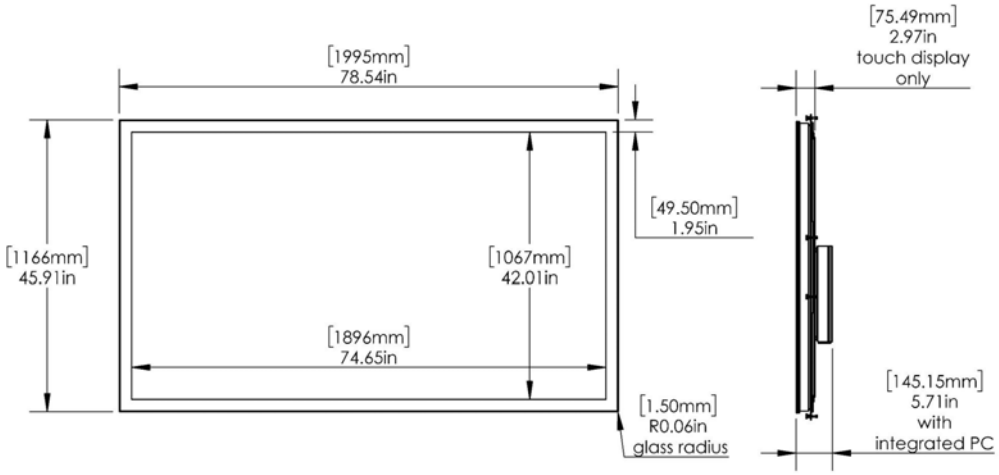

WEIGHT
212 LBS
96 KG

SHIP WEIGHT
420 LBS
190 KG

Interactive Display

- 4K UHD (3840x2160) LG commercial display rated 24/7
- 86” diagonal, strengthened, anti-stiction, 6mm glass surface
- Displax projected capacitive touch sensor
- ±8ms touch response time
- 40 touch points with palm rejection
- Native contrast ratio 1100:1
- 500 nit (cd/m2) luminance
- Full support for Tangible Engine object recognition software

Optional Integrated System

- Single push-button power
- Custom lockable enclosure
- Windows 11 Professional
- Universal 110-240V power system
- Two 10W integrated speakers

STANDARD

- Intel 15th Gen Core Ultra 5 245K processor
- NVIDIA RTX A2000 16GB Ada Generation graphics card
- 16GB DDR5 RAM
- 500GB M.2 NVMe SSD

PERFORMANCE

- Intel 15th Gen Core Ultra 7 265K processor
- NVIDIA RTX 4000 20GB Ada Generation graphics card
- 32GB DDR5 RAM
- Dual 500GB M.2 NVMe SSD

Connectivity

- TPM/TPP compatible for secure environments
- WiFi 802.11 a/b/g/n/ac, Ethernet, Bluetooth 5.0
- Wireless keyboard with integrated trackpad
- Direct access via USB ports
- Audio output via 1/8” audio jack
- HDMI output (PC)
- RFID (optional)
- Communication hardware can be removed upon request for secure environments

Custom Fabrication

Ideum can provide custom design and fabrication services for your Inline display. Our industrial designers, craftspeople, and technicians can design custom touch tables, exhibits, meeting room tables, and other cabinetry with a range of integration options. Our Exhibit Fabrication Workshop is fully equipped for woodworking, and we design fine furniture with integrated technology and other electronics.

Ideum has created custom touch tables and kiosks for San Diego Zoo, New Mexico Film, Valle de Oro National Wildlife Refuge, Amada Corporation, Wichita State University, IDEO, Gensler, and others.

Inline

Specification Sheet

What's Inside

Our touch tables and touch walls include the best performing, most reliable components available.

4K UHD (3840x2160) commercial LCD display*

PCAP touch sensor with 40 - 80 touch points.

NVIDIA™ graphics card

Intel© Core™ Processor

Aircraft-grade aluminum made in the USA

** Please note that these specifications are typical of our standard models, there are variations, please see the individual specifications for more information.*

Software

The optional Inline integrated computer comes with Windows 11 Professional and supports PC applications. Applications that are optimized for touch work best.

Ideum offers custom software development. We have experience developing interactive applications, mostly for public spaces. Our expertise in a broad range of programming environments allows our work to span the realms of informal and formal education, interactive technology, art, and entertainment.

ALSO AVAILABLE

Tangible Authoring

Select Ideum multitouch tables support the Tangible Engine object recognition SDK.

Tangible Engine is an authoring environment created for Ideum multitouch tables to support fiduciary object recognition using 3D-printed conductive patterns. Tangible Engine includes test objects, a Visualizer / Configurator Tool, an SDK, and documentation.

Pricing and more information can be found at: tangibleengine.com

RFID Utility

Ideum multitouch products include an optional RFID utility for enhanced functionality.

Our RFID software allows you to automate system tasks, launch and switch applications, and more with a single movement. This useful utility is free for Ideum touch table owners.

Learn more at: ideum.com/news/rfid-reader-app

About **Ideum**

Ideum designs experiences for public spaces, offering exhibit design, AV, and software development services to museums, nonprofits, and socially responsible companies. We are proudly based in Corrales, New Mexico, and collaborate with creative partners worldwide.

SALES & DESIGN INQUIRIES

We sell our multitouch tables and displays directly, both in the USA and internationally. We've sold our hardware in nearly 60 countries around the world. Ideum also develops custom exhibits and software. Contact us to learn more about our services.

Use our online inquiry form
Email: sales@ideum.com
Phone: (505) 792-1110 ext. 1

WARRANTY & SUPPORT

Our products are custom-built with only the highest quality components available and are designed to last. We back all of our hardware, including custom exhibits, with a three-year warranty. The same people who design and build our systems provide our timely support.

Submit a ticket: support.ideum.com
Email: support@ideum.com
Phone: (505) 792-1110 ext. 2

Hours: 8:00 AM – 5:00 PM Mountain Time, Monday through Friday.

The Colossus, Drafting, Pano, Platform, Pico, Pro, Reader Rail, and Inline touch tables and the Portrait and Presenter touch displays from Ideum are designed, manufactured, and made in the USA of U.S. and imported parts.

ADA COMPLIANT

Compliant with height and reach requirements for the Americans with Disabilities Act standards for accessibility. Learn more about Ideum's commitment to accessibility at ww.ideum.com/ada

IMPORTANT NOTICE TO PURCHASER: Specifications are subject to change without notice. Ideum hardware and software are warrantied from the date of receipt to the period stated in the warranty. Please note that under Ideum's warranty, Ideum has no obligation for any hardware product that is modified or damaged through misuse, accident, neglect, or subsequent integration, service, or tampering, by anyone other than Ideum or an Ideum-approved entity or individual. Ideum makes no additional warranties, express or implied, including but not limited to any fitness for a particular purpose. The User is responsible for determining whether Ideum hardware products or software are fit for the User's particular purpose. If the hardware product or software are proven not to have met Ideum's warranty, then Ideum's sole obligation and User's and Purchaser's exclusive remedy will be, at Ideum's option, to repair or replace the product or refund its purchase price. Ideum shall not be liable in any action against it in any way related to the hardware products or software for any loss or damages, whether non-specified, direct, indirect, special, incidental or consequential (including downtime, loss of profits or goodwill) regardless of the legal theory asserted. Please see our full warranty for complete details.